Instruction Book
Manuel de Instrucciones
Livret d'Instructions

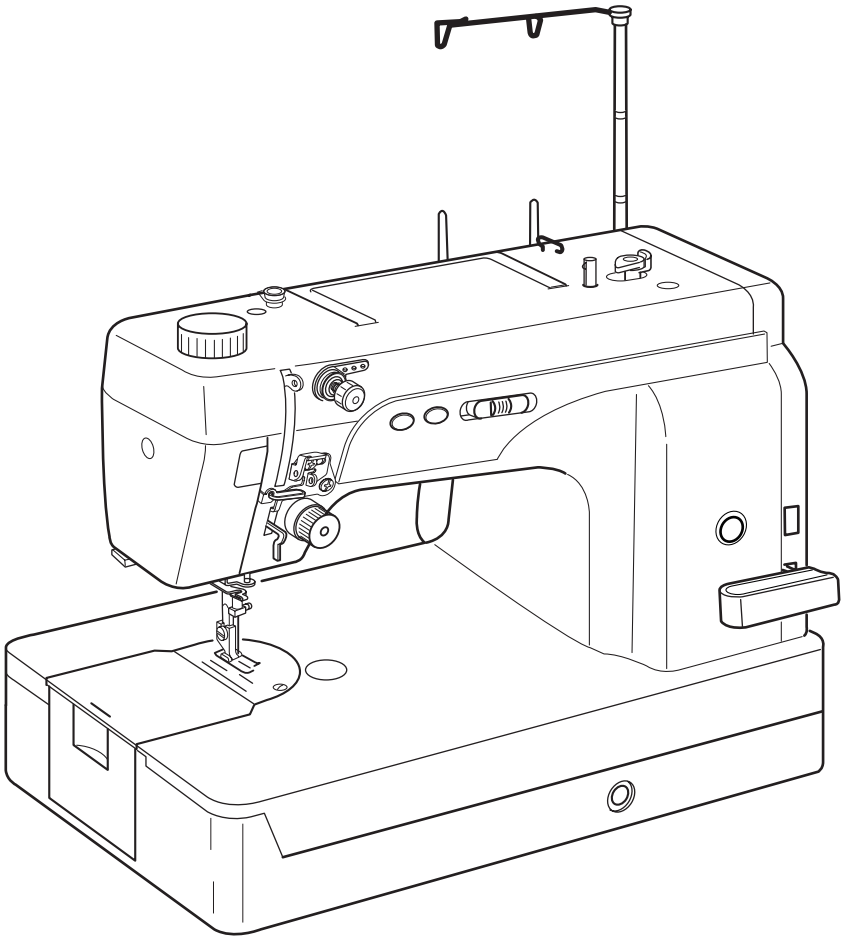

IMPORTANT SAFETY INSTRUCTIONS

When using an electrical appliance, basic safety precautions should always be followed, including the following:
This sewing machine is designed and manufactured for household use only.
Read all instructions before using this sewing machine.

DANGER— To reduce the risk of electric shock:

1. An appliance should never be left unattended when plugged in. Always unplug this sewing machine from the electric outlet immediately after using and before cleaning.

WARNING— To reduce the risk of burns, fire, electric shock, or injury to persons:

1. Do not allow to be used as a toy. Close attention is necessary when this sewing machine is used by or near children.
2. Use this appliance only for its intended use as described in this owner's manual.
   Use only attachments recommended by the manufacturer as contained in this owner's manual.
3. Never operate this sewing machine if it has a damaged cord or plug, if it is not working properly, if it has been dropped or damaged, or dropped into water.
   Return this sewing machine to the nearest authorized dealer or service center for examination, repair, electrical or mechanical adjustment.
4. Never operate the appliance with any air opening blocked. Keep ventilation openings of this sewing machine and foot controller free from accumulation of lint, dust and loose cloth.
5. Never drop or insert any object into any opening.
6. Do not use outdoors.
7. Do not operate where aerosol (spray) products are being used or where oxygen is being administered.
8. To disconnect, turn all controls to the off ("O") position, then remove plug from outlet.
9. Do not unplug by pulling on cord. To unplug, grasp the plug, not the cord.
10. Keep fingers away from all moving parts. Special care is required around the sewing machine needle and/or cutting blade.
11. Always use the proper needle plate. The wrong plate can cause the needle to break.
12. Do not use bent needles.
13. Do not pull or push fabric while stitching. It may deflect the needle causing it to break.
14. Switch this sewing machine off ("O") when making any adjustment in the needle area, such as threading the needle, changing the needle, threading the bobbin or changing the presser foot, and the like.
15. Always unplug this sewing machine from the electrical outlet when removing covers, lubricating, or when making any other adjustments mentioned in this owner's manual.

SAVE THESE INSTRUCTIONS

For Europe only:
This appliance can be used by children aged from 8 years and above and persons with reduced physical, sensory or mental capabilities or lack of experience and knowledge if they have been given supervision or instruction concerning use of the appliance in a safe way and understand the hazards involved. Children shall not play with the appliance. Cleaning and user maintenance shall not be made by children without supervision.

For outside Europe (except U.S.A and Canada):
This appliance is not intended for use by persons (including children) with reduced physical, sensory or mental capabilities, or lack of experience and knowledge, unless they have been given supervision or instruction concerning use of the appliance by a person responsible for their safety.
Children should be supervised to ensure that they do not play with the appliance.

Please note that on disposal, this product must be safely recycled in accordance with relevant National legislation relating to electrical/electronic products. If in doubt please contact your retailer for guidance. (European Union only)

TABLE OF CONTENTS

KNOW YOUR MACHINE
Name of Parts 4
Standard Accessories 6
Knee Lifter 6

GETTING READY TO SEW
Connecting Machine to Power Supply 8
Controlling Sewing Speed 8
Up/Down Needle Position Button 10
Bobbin Winding Button 10
Thread Cutter Button 10
Stitch Length Adjustment Dial 10
Reverse Stitch Lever 10
Presser Foot Lifter 12
Foot Pressure Dial 12
Attaching and Detaching Presser Foot 12
To Remove Bobbin Case and Bobbin 14
Setting the Spool of Thread 14
Winding a Bobbin 16
Inserting a Bobbin 18
Inserting the Bobbin Case into the Hook 18
Threading the Needle Thread (Leather, heavy weight fabric) 20
Threading the Needle Thread (Medium weight and light weight fabric) 24
Built-in Needle Threader 28
Drawing up the Bobbin Thread 30
Changing the Needle 32
Balancing Needle Thread Tension 34
Adjusting Bobbin Thread Tension 34
Adjusting Needle Thread Tension 34

HOW TO SEW
Test Stitching 36
Securing a Seam 38
Turning a Square Corner 38
Using the Cloth Guide 40
Rolled Hem 40

CARE & MAINTENANCE
Cleaning the Hook and Feed Dog 42
Oiling the Machine 42
Troubleshooting 44

KNOW YOUR MACHINE

Name of Parts

① Foot pressure dial
② Thread guide
③ Retractable thread guide
④ Bobbin winder spindle
⑤ Bobbin winder stopper
⑥ Speed control slider
⑦ Stitch length display
⑧ Thread cutter button
⑨ Reverse stitch lever
⑩ Bobbin winding button
⑪ Up/Down needle button
⑫ Knee lifter socket
⑬ Thread guide
⑭ Thread tension dial
⑮ Hook cover
⑯ Hook cover plate
⑰ Needle plate
⑱ Thread cutter
⑲ Face cover
⑳ Foot pressure indicator
㉑ Thread take-up lever
㉒ Needle threader
㉓ Needle clamp screw
㉔ Needle
㉕ Screw holes for attachments
㉖ Presser foot
㉗ Feed dog
㉘ Setscrew
㉙ Carrying handle
㉚ Presser foot lifter
㉛ Spool pins
㉜ Machine sockets
㉝ Power switch
㉞ Stitch length adjustment dial
㉟ Handwheel
㊱ Foot control
㊲ Power supply cord
㊳ Connector for external thread cutter switch (2.5 mm jack)
* Thread cutter switch is the optional item.

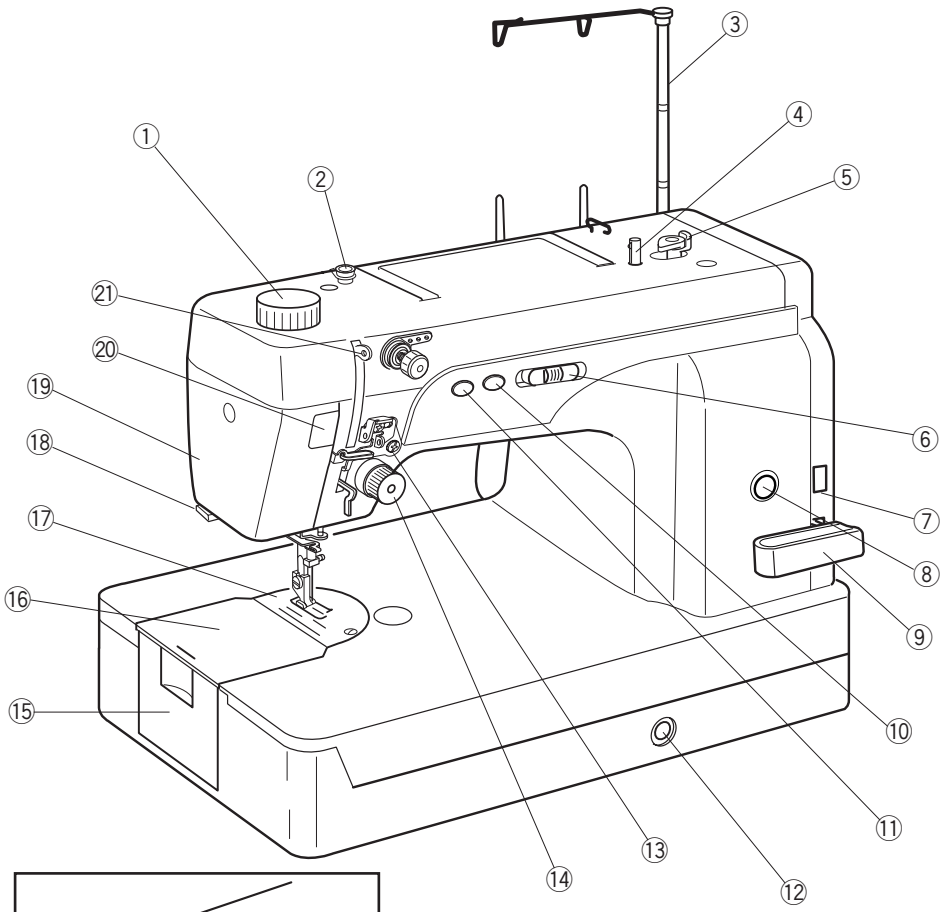

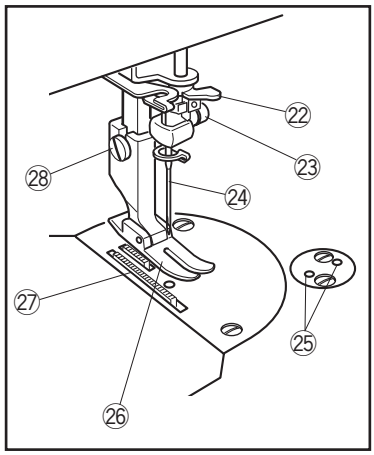

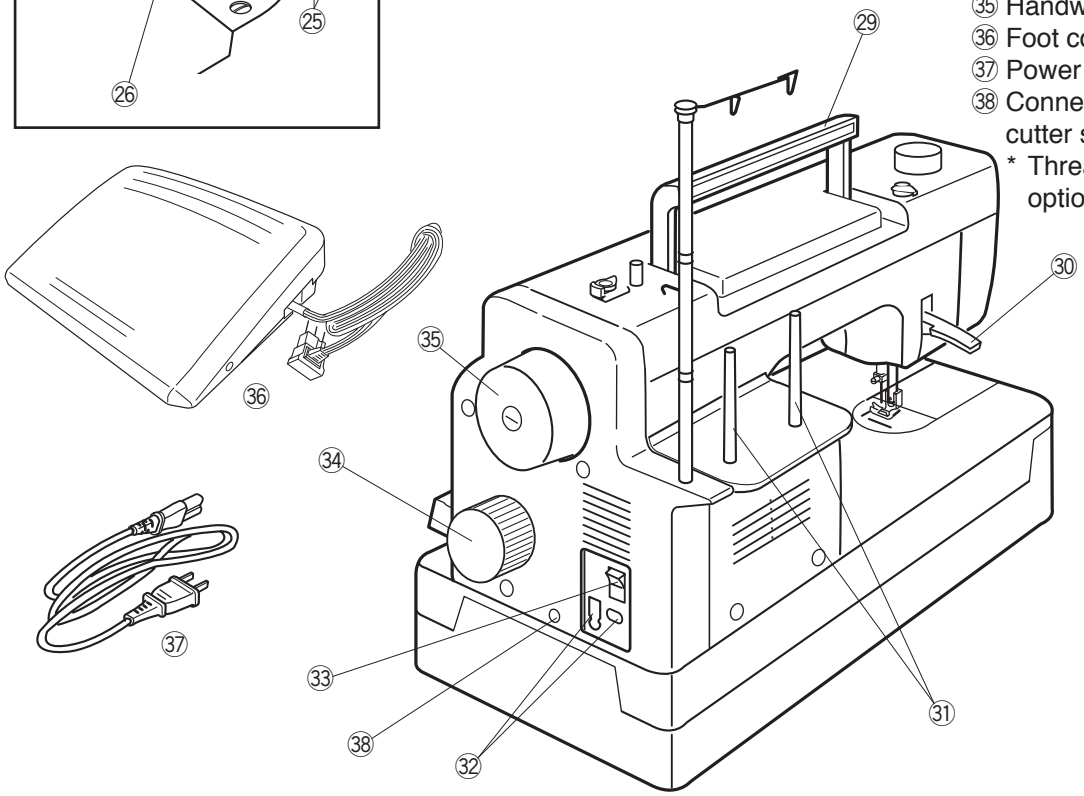

Designs and specifications are subject to change without prior notice.

Standard Accessories

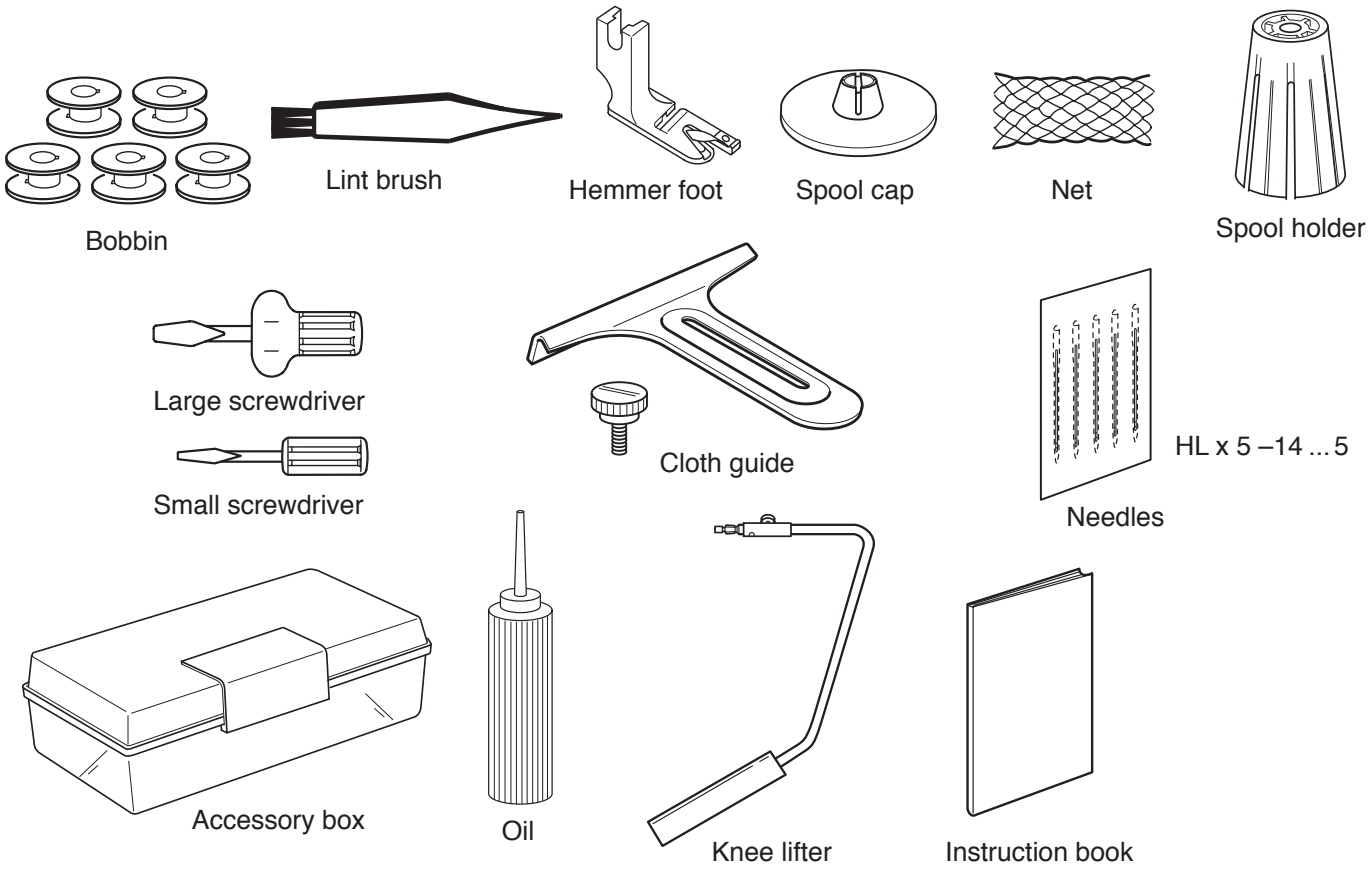

Knee Lifter

The knee lifter is extremely helpful when sewing patchwork, quilting etc, since it allows you to handle the fabric while your knee controls the presser foot.

Attaching the knee lifter
Match the ribs on the knee lifter with the notches in the knee lifter socket and insert the knee lifter.
① Knee lifter
② Knee lifter socket

Adjusting the knee lifter
The angle of knee lifter can be adjusted to fit your knee. Loosen the setscrew and slide the angle bar in or out to adjust the angle of the knee lifter.
Tighten the setscrew to secure the angle bar.
③ Setscrew
④ Angle bar

Using the knee lifter
Push the knee lifter with your knee to easily move the presser foot up and down.
You can control how high the foot rises by the amount of knee pressure you exert.

NOTE:
Do not touch the knee lifter while stitching, otherwise the fabric will not be fed smoothly.

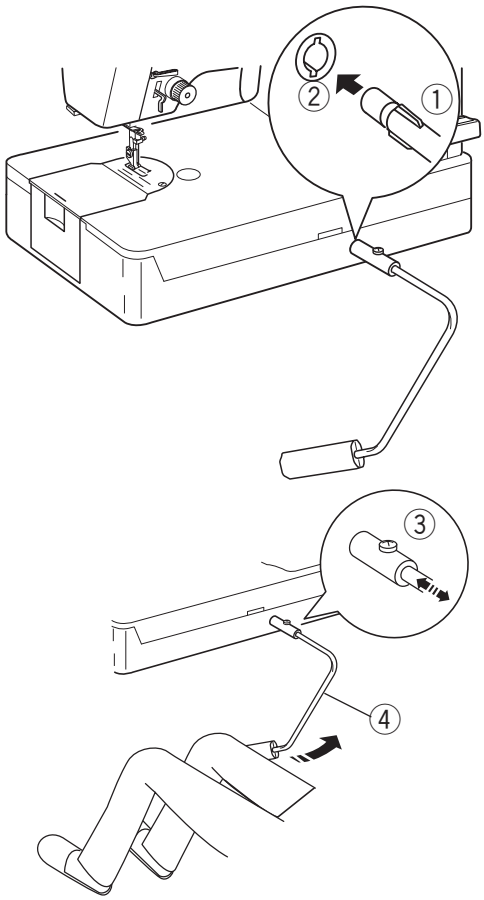

GETTING READY TO SEW

Connecting Machine to Power Supply

CAUTION
Always turn the power switch off and unplug the sewing machine from the electrical outlet when the machine is not in use.

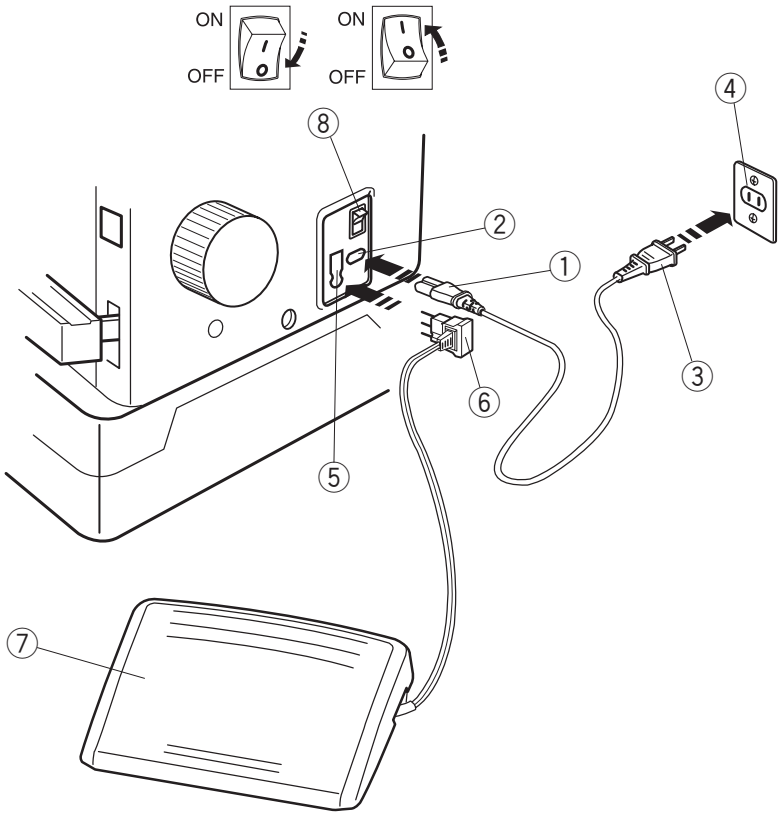

① Machine plug
② Machine socket for power supply plug
③ Power supply plug
④ Outlet
⑤ Machine socket for foot control
⑥ Foot control plug
⑦ Foot control
⑧ Power switch

Turn off the power switch ⑧.
Insert the foot control plug ⑥ into the machine socket ⑤.
Insert the machine plug ① into the machine socket ②.
Insert the power supply plug ③ into the wall outlet ④.
Turn on the power switch ⑧.

Controlling Sewing Speed

Speed control slider

Sewing speed can be varied with the speed control slider according to your sewing needs.
To increase sewing speed, slide it to the right.
To decrease sewing speed, slide it to the left.

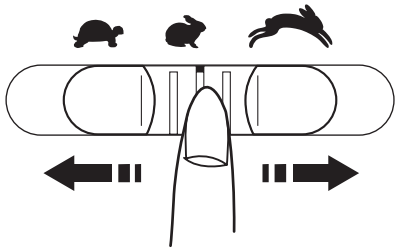

Foot control

Sewing speed is varied by the foot control.
The harder you press down on the foot control, the faster the machine runs.

The machine runs at the maximum speed set by the speed control slider when the foot control is being fully depressed.

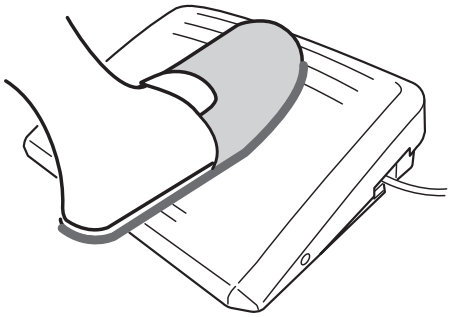

Operating Instructions:
The symbol “O” on a switch indicates the “off” position of a switch.
For appliances with a polarized plug (one blade wider than the other): To reduce the risk of electric shock, this plug is intended to fit in a polarized outlet only one way. If it does not fit fully in the outlet, reverse the plug. If it still does not fit, contact a qualified electrician to install the proper outlet. Do not modify the plug in any way.

Up/Down Needle Position Button

Press this button to bring the needle bar up or down. The RED LED will light up when the needle is down. The GREEN LED will light up when the needle is up.
The machine will stop with the needle up or down depending on the needle position determined by this button.
The machine will always stop with the needle up after auto thread cutting or buttonhole sewing.

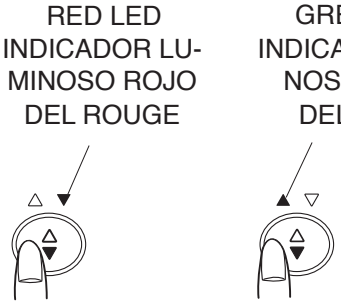

Bobbin Winding Button

Press this button to wind the bobbin.
The LED will light up when you shift the bobbin winding stopper toward the bobbin and press this button.
The LED signal will turn off after bobbin winding is finished.

Thread Cutter Button

Pressing this button after sewing will trim the threads.
You can continue sewing without pulling the bobbin thread up after trimming the threads.

* Use the thread cutter on the face cover if the thread is thicker than #30.

* The foot control and Up/down needle position button cannot be used while the machine is trimming the threads.

* External switch can also be used.

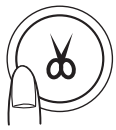

Stitch Length Adjustment Dial

You can adjust the stitch length from 0 to 6 mm by turning this dial. The stitch length will be show on the stitch length display ①.

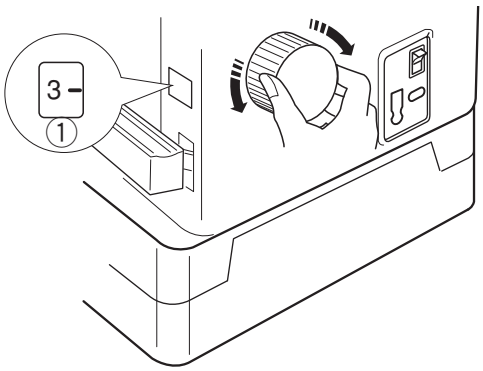

Reverse Stitch Lever

The machine will sew in reverse while the reverse stitch lever is pressed down. The machine will sew forward if the lever is released.
Use the lever to lock the beginning and end of seams.

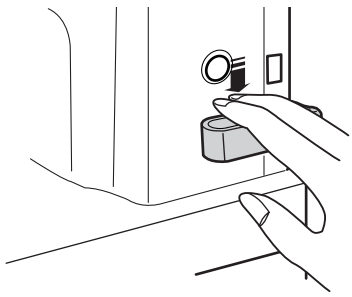

Presser Foot Lifter

① Presser foot lifter
② Normal up position
③ Highest position

The presser foot lifter ① raises and lowers the presser foot.
You can raise it higher ③ than the normal up position ② to help you place thick material under the foot.

NOTE:
The machine will not run if the presser foot is in up position.

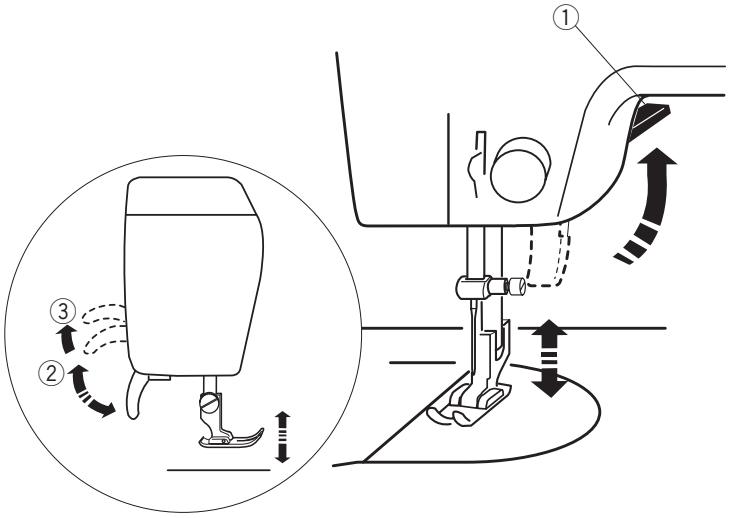

Foot Pressure Dial

① Foot pressure dial
② Setting indicator

The foot pressure control dial should be set at “3” for regular sewing.
Reduce the pressure for appliqué, sewing on fine synthetics and elastic fabrics.
Set the dial at “1” when sewing extra fine fabrics.

NOTE:
Do not reduce the foot pressure lower than “0”.

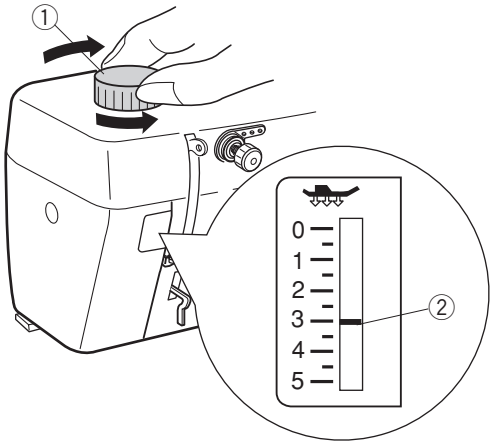

Attaching and Detaching Presser Foot

① Setscrew

To change the presser foot, raise the presser foot lifter.

Loosen the setscrew ①, choose the proper foot and insert it from the bottom.

Tighten the setscrew ① with the large screwdriver to secure the foot.

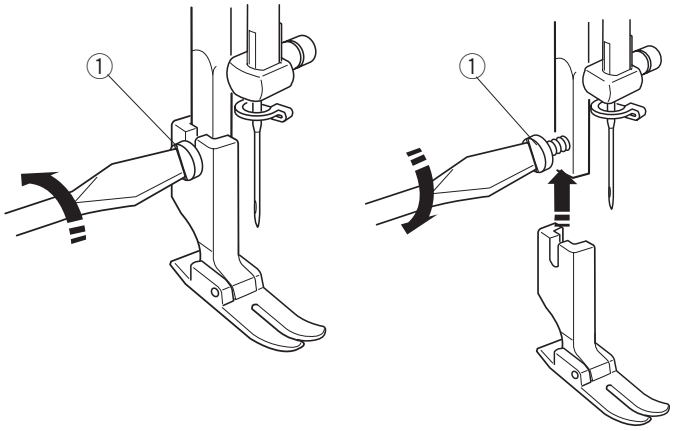

To Remove Bobbin Case and Bobbin

CAUTION
Turn the power switch off and unplug the sewing machine from the electrical outlet

① Hook cover plate
② Hook cover
③ Latch
④ Bobbin case
⑤ Bobbin

1 Raise the needle and presser foot.
Remove the hook cover plate ① and open the hook cover ②.

2 Pull open the latch ③ of the bobbin case ④. Take the bobbin case straight out of the hook.

- **To remove the bobbin from the bobbin case:**
  Release the latch, then drop the bobbin ⑤ out of the bobbin case as illustrated.

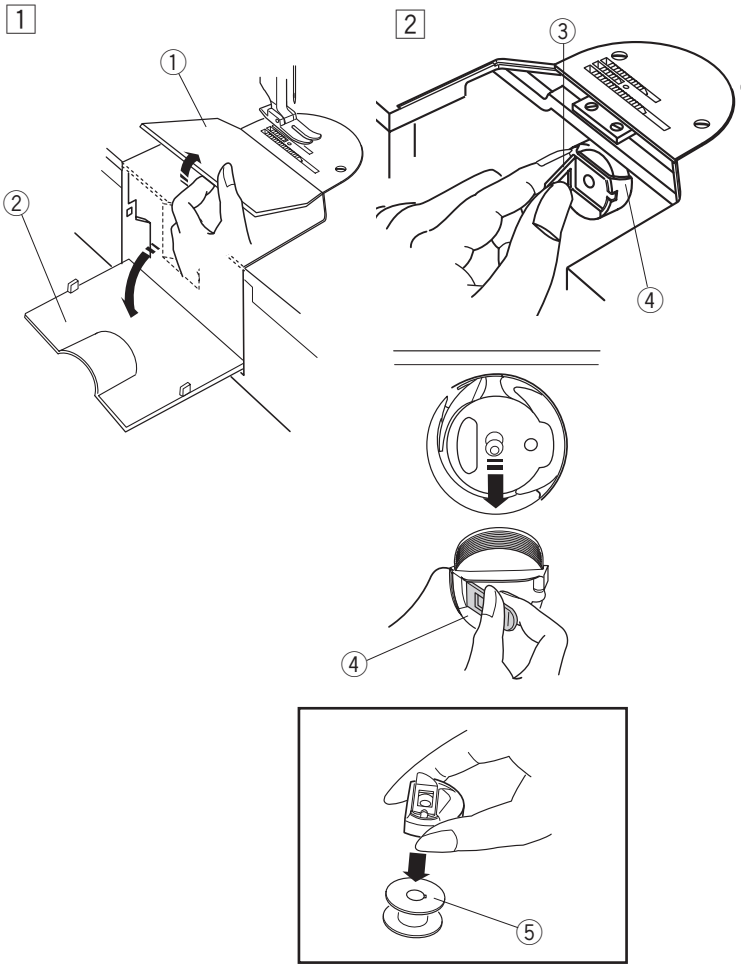

Setting the Spool of Thread

① Spool of thread
② Spool pin
③ Spool cap

- **Setting a spool of thread:**
  Place a spool of thread ① on the spool pin ② with the thread coming off the spool as shown. Attach the spool cap ③, and press it firmly against the spool of thread.

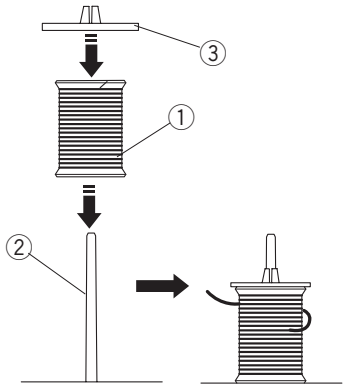

④ Spool holder
⑤ Net

- **Setting the thread cone:**
  Place the spool holder ④ on the spool pin, then place the thread cone on the spool holder. Cover the thread cone with the net ⑤ if the spool thread is shaky when sewing.

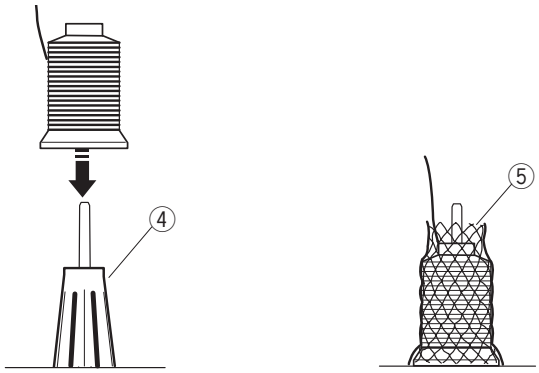

Winding a Bobbin

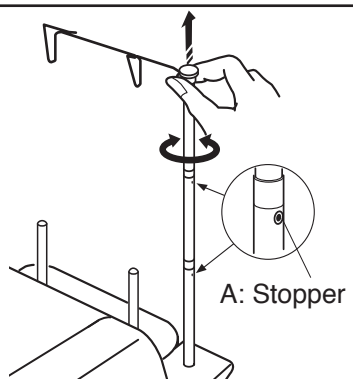

Pull the thread guide bar up as far as it will go. Turn the thread guide bar until the stoppers click into position.

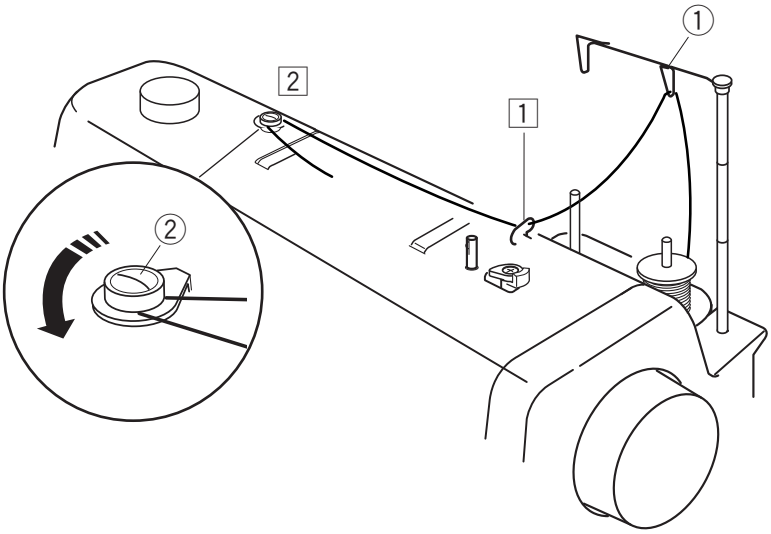

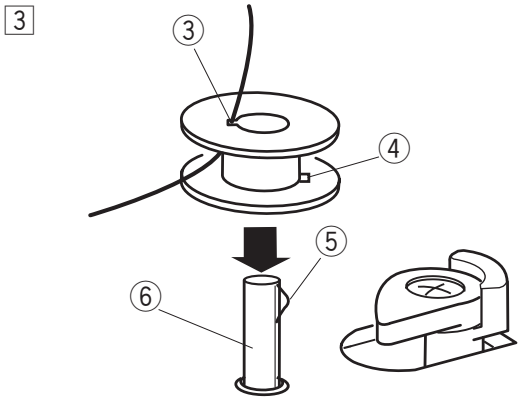

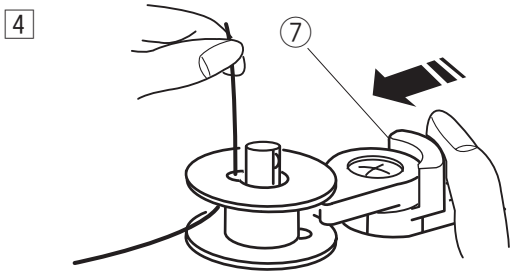

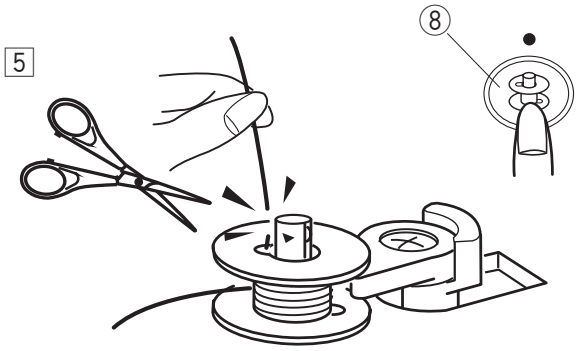

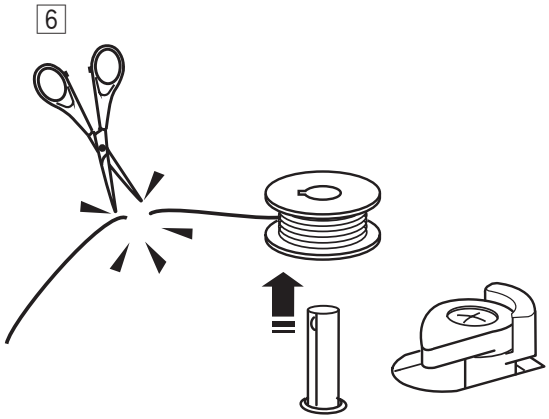

① Thread guide bar
② Bobbin winding tension disk
③ Bobbin hole
④ Notch
⑤ Spring
⑥ Bobbin winder spindle
⑦ Bobbin winder stopper
⑧ Bobbin winding button

1 Pass the thread through the guide on the thread guide bar ① from behind.

2 Pass the thread under the bobbin winding tension disk ②.

3 Thread through the hole ③ in the bobbin from the inside to the outside.
Match the notch ④ with the spring ⑤ on the bobbin winder spindle. Then insert the bobbin on the bobbin winder spindle ⑥.

4 Push the bobbin winder stopper to the left ⑦.

5 Hold the free end of the thread in your hand and press the bobbin winding button ⑧. Press the bobbin winding button again to stop the bobbin when it has made several turns, and cut the thread close to the hole in the bobbin.

6 Press the bobbin winding button again. When the bobbin is fully wound, the machine will stop automatically.
Return the bobbin winder stopper to its original position. Cut the thread with a scissors. Remove the bobbin from the bobbin winder spindle.

NOTE:
This machine has an exclusive motor for bobbin winding, which allows you to wind a bobbin while stitching.

Inserting a Bobbin

1 Place a bobbin in the bobbin case making sure the thread winds clockwise on the bobbin as illustrated.

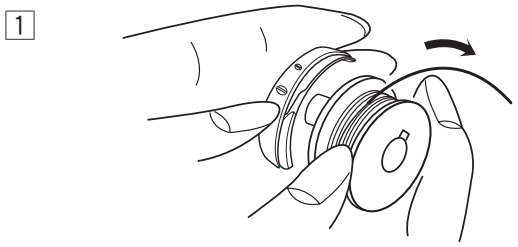

2 Draw the thread through the slit ① of the bobbin case.
① Slit

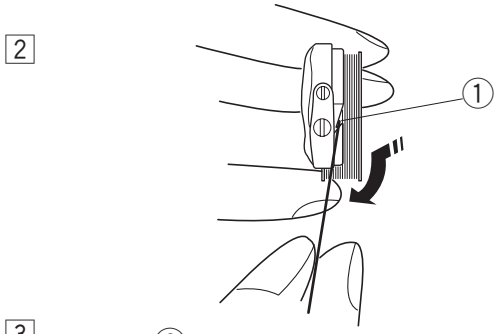

3 Continue to draw the thread under the tension spring ② and through the opening ③.
Pull out about 4″ (10 cm) of thread.
The bobbin should spin clockwise when the thread is pulled out of the bobbin case.
② Tension spring
③ Opening

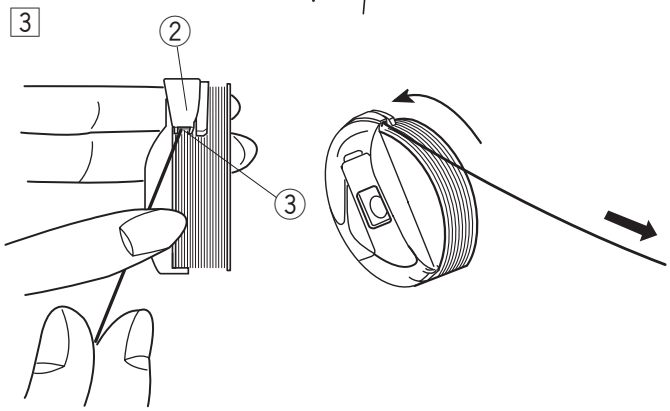

Inserting the Bobbin Case into the Hook

* Be sure that the needle is at its highest position.

1 Holding the latch ① open, position the bobbin case into the hook aligning the bulge ② with the concave ③.
The bobbin case should lock into place when the latch is released.
① Latch
② Bulge
③ Concave

* Leave the tail of the bobbin thread to the left as shown.

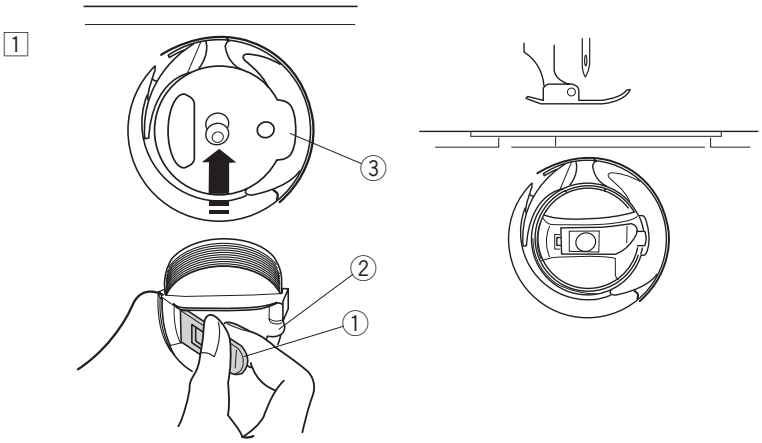

2 Close the hook cover ④ and attach the hook cover plate ⑤ in this order.
④ Hook cover
⑤ Hook cover plate

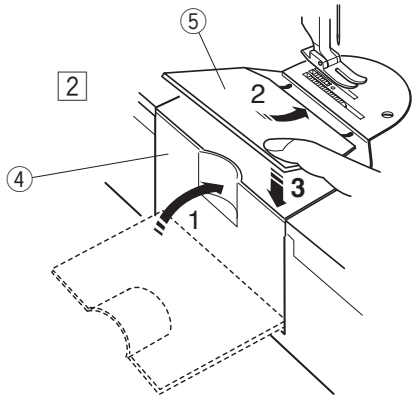

Threading the Needle Thread (Leather, heavy weight fabric)

Synthetic thread size 20 to 30 is recommended.Do not use thread size 40 or finer. Otherwise, thread may break.

* Use only left twist thread.The left twist thread will twist firmly when you twist it toward you with fingers of your right hand.

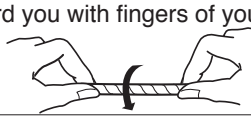

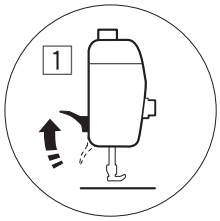

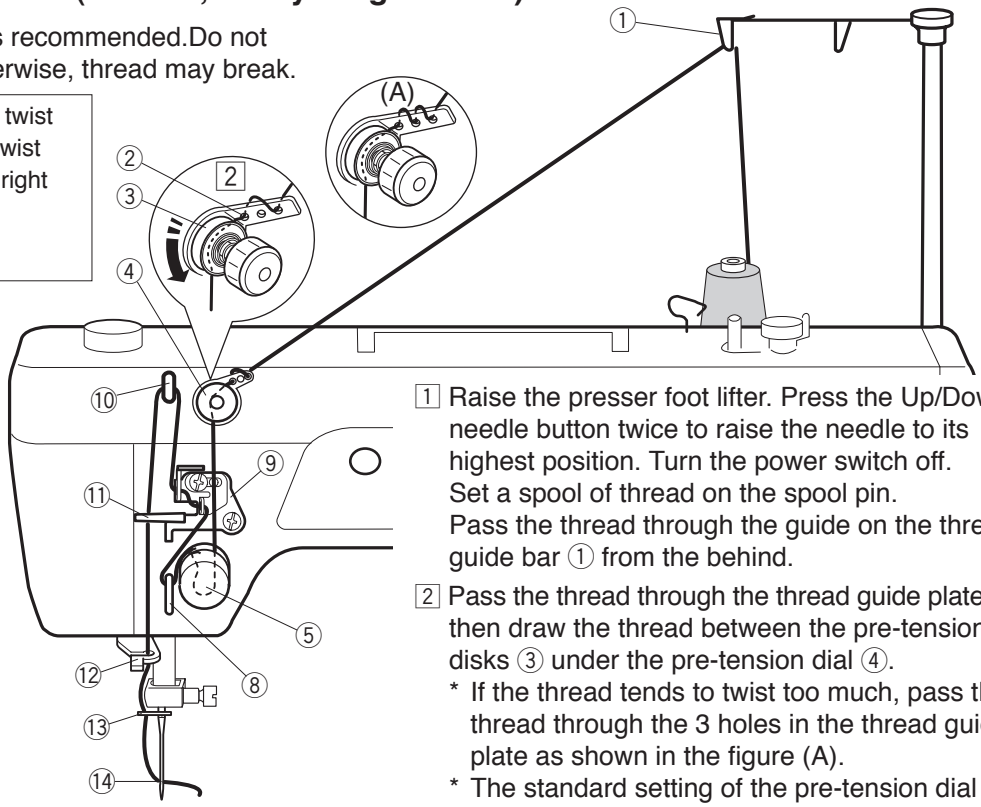

Pre-tension dial
The screw should be lower than the pre-tension dial.

Higher than the pre-tension dial.

No gap with the pre-tension dial.

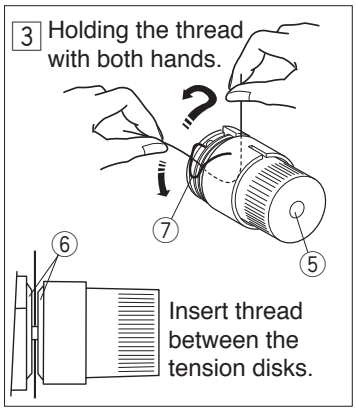

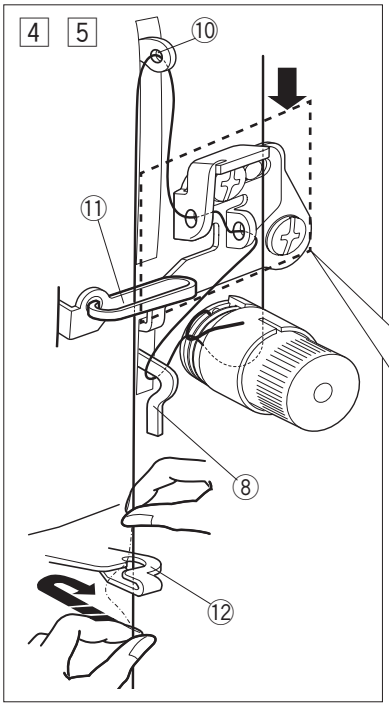

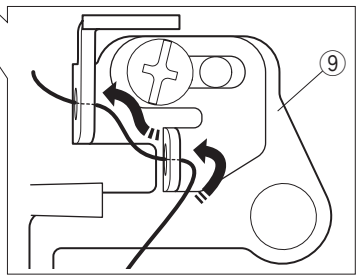

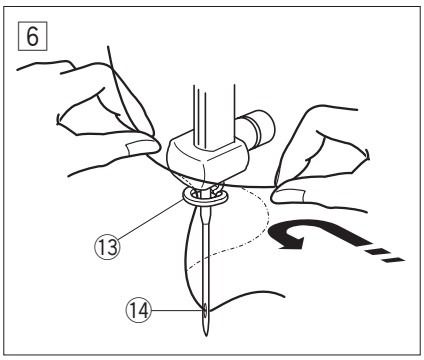

1 Raise the presser foot lifter. Press the Up/Down needle button twice to raise the needle to its highest position. Turn the power switch off.
Set a spool of thread on the spool pin.
Pass the thread through the guide on the thread guide bar ① from the behind.

2 Pass the thread through the thread guide plate ②, then draw the thread between the pre-tension disks ③ under the pre-tension dial ④.
* If the thread tends to twist too much, pass the thread through the 3 holes in the thread guide plate as shown in the figure (A).
* The standard setting of the pre-tension dial is that the screw head sinks about 4 mm (1/8″ to 3/16″).

3 Holding the thread with both hands, draw the thread down and around the tension dial ⑤ from right to left.
Pull the thread up to insert it between the tension disks ⑥ and pass it over the tail of the check spring ⑦. Then pull the thread down over the loop of the check spring.

4 Draw the thread under the thread guide ⑧.
Pass the thread through the 2 holes in the thread guide ⑨ as shown.
* The needle thread tension can be adjusted by the thread guide ⑨.

5 Through the eye of the take-up lever ⑩.
Pass the thread through the thread guide ⑪.
Holding the thread with both hands, slip the thread into the thread guide ⑫ as shown.

6 Draw the thread down to the needle bar thread guide ⑬, and then pass the thread through the needle eye on the left side of the needle ⑭.

* Adjusting the needle thread tension by the thread guide ⑨.

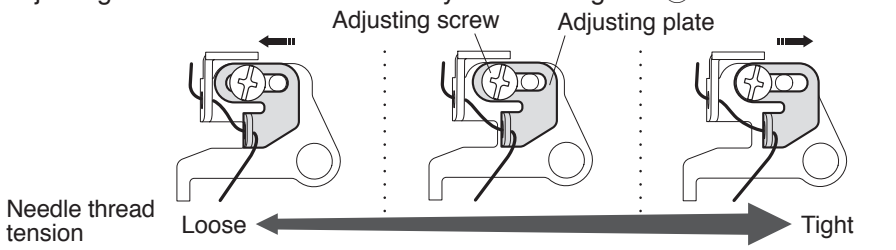

Loosen the adjusting screw with the screwdriver provided with the machine. Slide the adjusting plate to the right or left to adjust the needle thread tension. Tighten the adjusting screw. Normally adjust the needle thread tension by the thread tension dial (refer to “Adjusting Needle Thread Tension” on page 34).

Threading the Needle Thread (Medium weight and light weight fabric)

* Use only left twist thread.The left twist thread will twist firmly when you twist it toward you with fingers of your right hand.

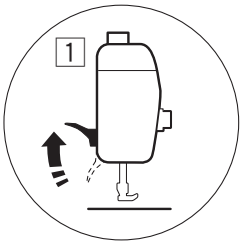

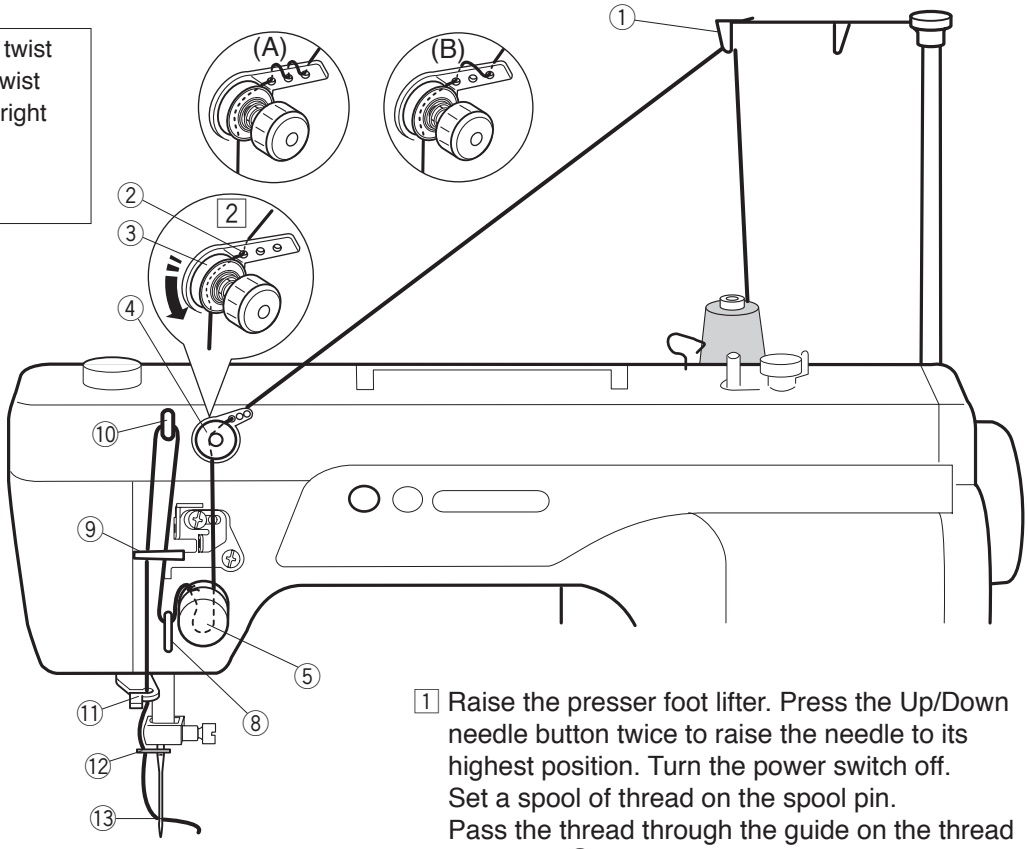

Pre-tension dial
The screw should be lower than the pre-tension dial.

Higher than the pre-tension dial.

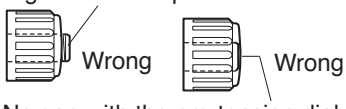

No gap with the pre-tension dial.

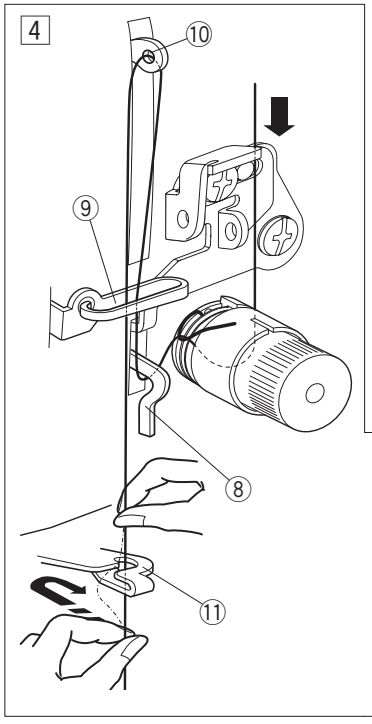

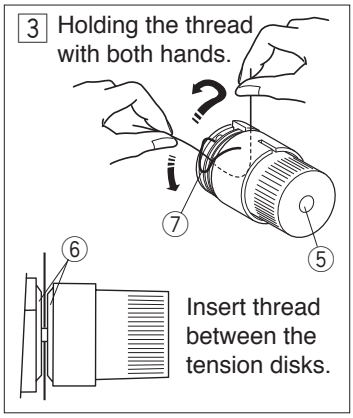

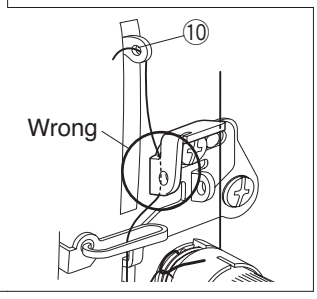

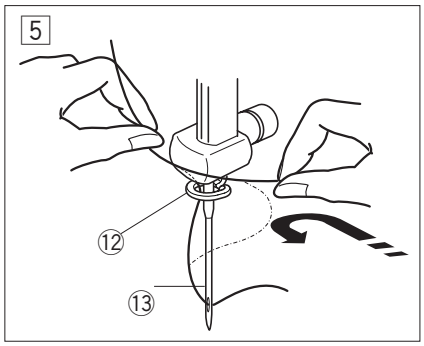

1 Raise the presser foot lifter. Press the Up/Down needle button twice to raise the needle to its highest position. Turn the power switch off.
Set a spool of thread on the spool pin.
Pass the thread through the guide on the thread guide bar ① from the behind.

2 Pass the thread through the thread guide plate ②, then draw the thread between the pre-tension disks ③ under the pre-tension dial ④.
* If the thread tends to twist too much, pass the thread through the holes in the thread guide plate as shown in the figure (A) or figure (B).
* The standard setting of the pre-tension dial is that the screw head sinks about 4 mm (1/8″ to 3/16″).

3 Holding the thread with both hands, draw the thread down and around the tension dial ⑤ from right to left.
Pull the thread up to insert it between the tension disks ⑥ and pass it over the tail of the check spring ⑦. Then pull the thread down over the loop of the check spring.

4 Draw the thread under the thread guide ⑧ and pass the thread through the thread guide ⑨.
Through the eye of the take-up lever ⑩.
* When passing the thread through the eye of the thread take-up lever, make sure that the thread is not caught on the thread guide.

Pass the thread through the thread guide ⑨ again. Holding the thread with both hands, slip the thread into the thread guide ⑪ as shown.

5 Draw the thread down to the needle bar thread guide ⑫, and then pass the thread through the needle eye on the left side of the needle ⑬.

Built-in Needle Threader

1 Lower the presser foot. Press the Up/Down needle button twice to raise the needle to its highest position. Turn the power switch off.
Push down the needle threader knob ① as far as it will go.

1

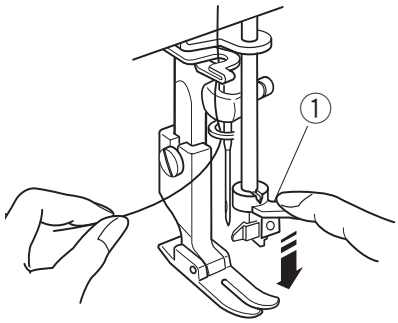

2 Turn the knob ① in the direction of the arrow to insert the hook into the needle eye.
The hook ④ comes out through the needle eye as illustrated.

2

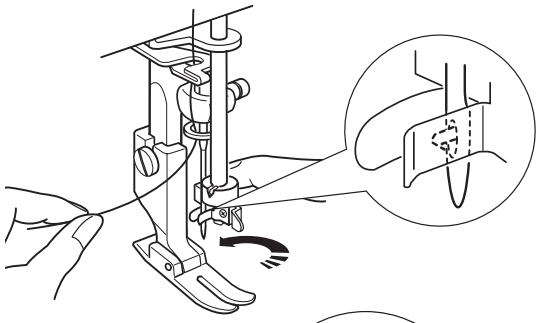

3 Holding the thread with both hands, draw the thread along the thread path ②.
Then hook the thread around the guide ③.

3

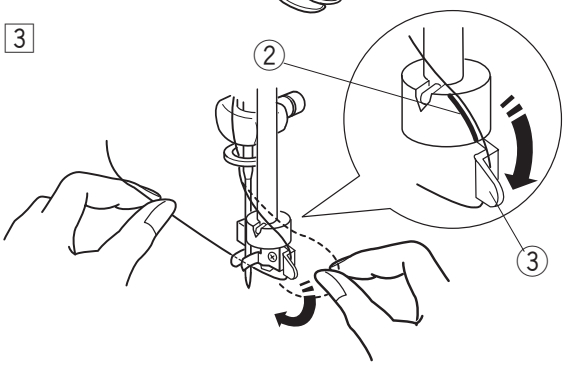

4 Draw the thread under the hook ④.
Hold the end of thread with your hand while pulling up the thread lightly in the direction of arrow.

4

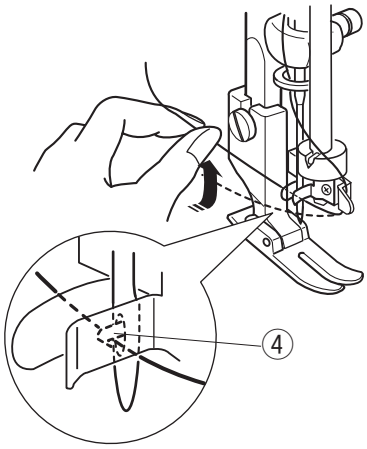

5 Turn the knob in the direction of the arrow as shown, drawing the thread loop ⑤ through the needle.
Release the threader knob slowly. Then pull the thread loop ⑤ to the right.

5

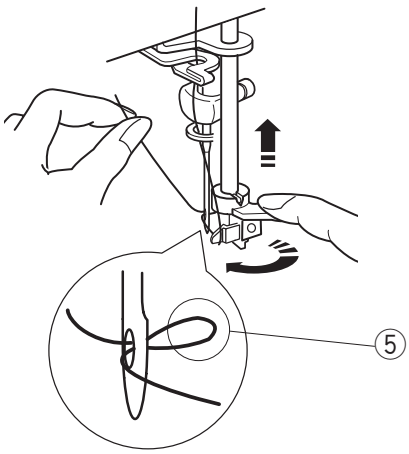

The needle threader may not work well with these combinations.	
Needle	Thread
#9	#20, #30, #50, #60
#11	#20, #30
#14	#16, #20, #30

Drawing up the Bobbin Thread

1 Hold the needle thread ① lightly with your left hand.

1

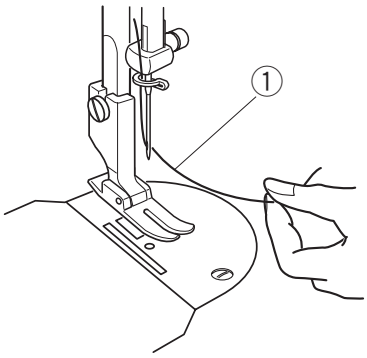

2 Turn the switch on. Press the Up/Down needle position button twice to pick up the bobbin thread ②. Pull the needle thread ① to bring up a loop of bobbin thread ②.

2

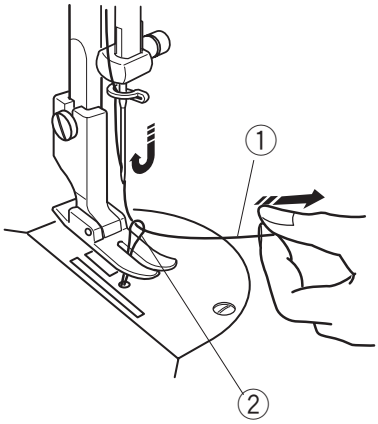

3 Slide 10 cm (4″) of both threads to the rear under the presser foot.

3

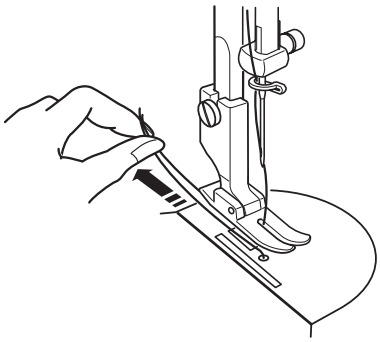

Changing the Needle

CAUTION
Turn the power switch off and unplug the machine before changing the needle.

1 Turn the power switch off. Lower the presser foot. Turn the needle clamp screw ① counterclockwise with the large screwdriver. Loosen the screw and remove the needle from the needle clamp.
① Needle clamp screw

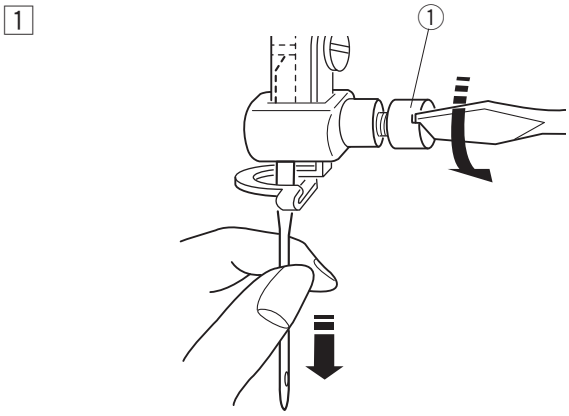

2 Insert a new needle into the needle clamp ② with the flat side ③ to the right, pushing it up as far as it will go.
Tighten the clamp screw ① firmly.
② Needle clamp
③ Flat side

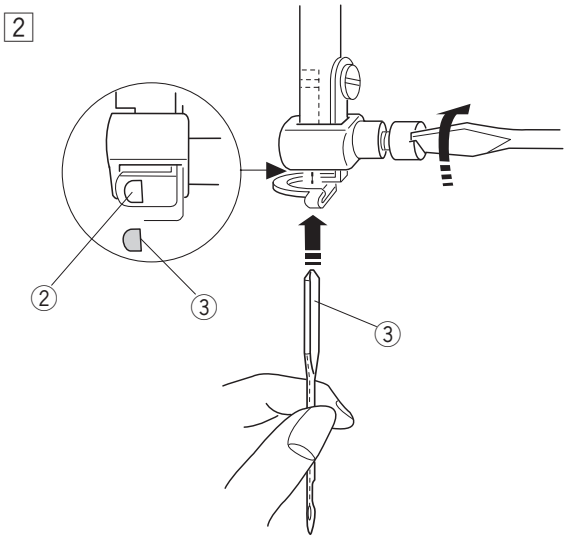

* Use an HL x 5 needle

To Check the Needle

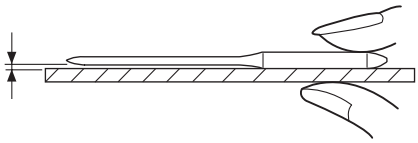

To determine if the needle is defective, place the flat side of needle on something flat (a needle plate, piece of glass, etc.). The gap between the needle and the flat surface should be consistent.

Never use a blunt or blunt needle, as it may cause skipped stitches or thread breakage. Defective needles can ruin the fabric. Always purchase good quality needles. Change needles often.

Thread and Needle Chart

Fabrics		Thread	Needle (HL x 5) size
Medium weight	Broadcloth Sheeting Gabardine Thin jersey	Synthetic #50-60 Cotton #50-60	#14
	Flannel Wool	Synthetic #50-60	#14
Heavy weight	Denim	Synthetic #20-50 Cotton #20-50	#14-18
	Jersey	Synthetic #20-50	#14-16
	Tweed	Synthetic #20-50 Cotton #30-50	#14-16
	Canvas	Synthetic #20-50	#14-18
	Artificial leather	Synthetic #20-30	#14-18

Balancing Needle Thread Tension

The needle thread and bobbin thread should interlock in the center of two layers of the fabric in straight seams.

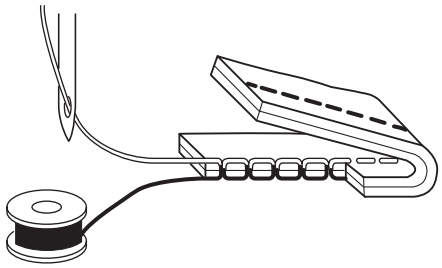

Adjusting Bobbin Thread Tension

To tighten the bobbin thread tension, turn the adjusting screw ① clockwise.
To loosen the bobbin thread tension, turn the adjusting screw counterclockwise.

① Adjusting screw

NOTE:
When adjusting the tension, turn the adjusting screw slightly since the adjustment is sensitive.

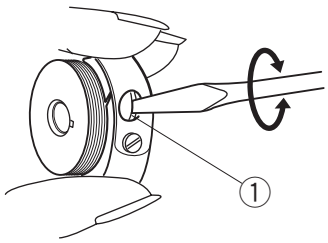

Adjusting Needle Thread Tension

Needle thread tension is too tight:
If the bobbin thread ④ shows through on the right side of the fabric ① and it feels bumpy, loosen the needle thread tension by turning the dial to the left.

① Right side of the fabric
② Wrong side of the fabric
③ Needle thread
④ Bobbin thread

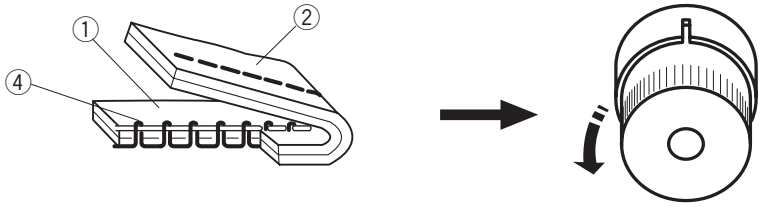

Needle thread tension is too loose:
If the needle thread ③ loops on the wrong side of the fabric ②, tighten the needle thread tension by turning the dial to the right.

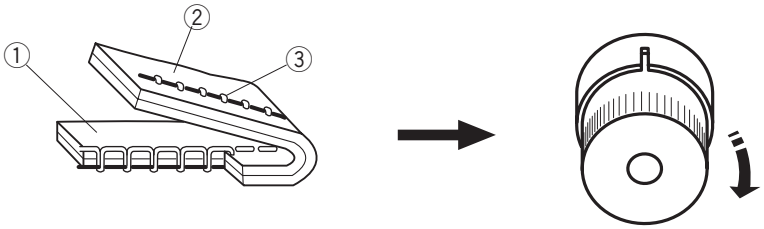

HOW TO SEW

Test Stitching

NOTE:
Raise the thread take-up lever to its highest position, otherwise the needle thread may slip out from the needle eye.

Before you start sewing your garment, try test stitching with the same thread and fabric as your garment.

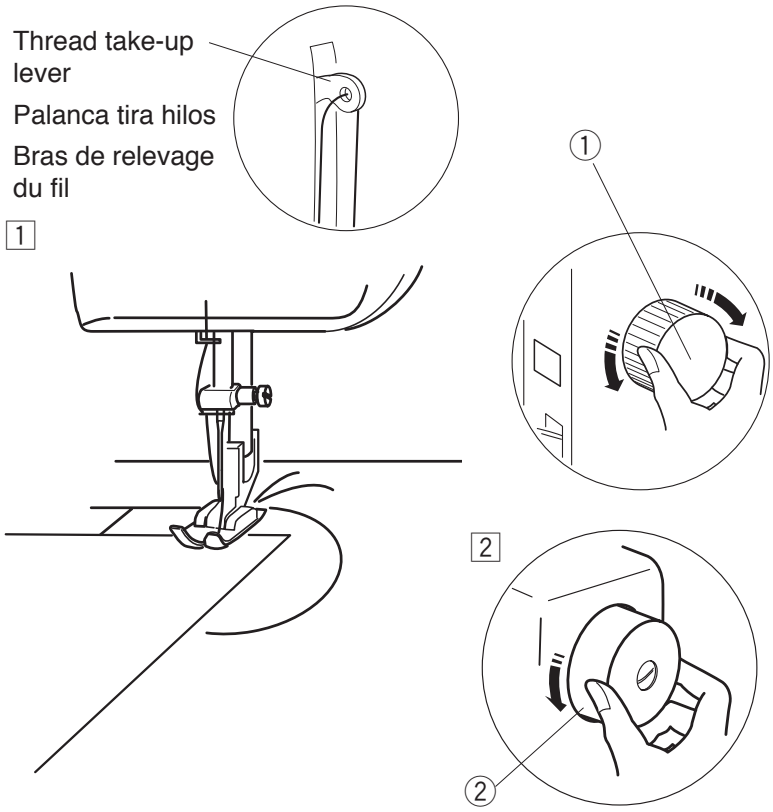

1 Turn the stitch length adjustment dial ① to adjust the stitch length.
Slide the needle and bobbin threads to the back under the presser foot. Use the same fabric for actual sewing.

2 Turn the handwheel ② toward you to lower the needle into the fabric.

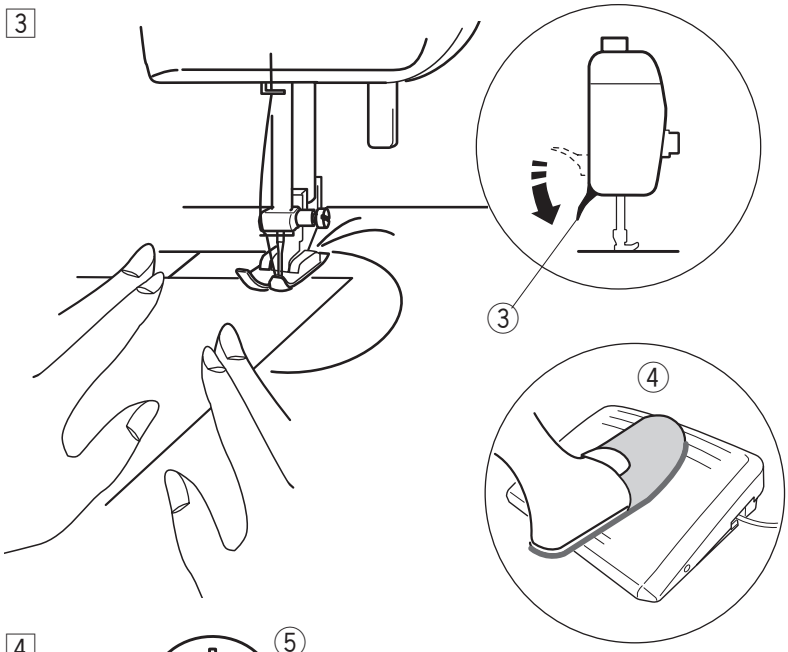

3 Set the speed control slider to (slow) until you get used to the sewing speed.
Lower the presser foot lifter ③.
Press the foot control ④ to start sewing.

NOTE:
The machine will not run if the presser foot is in up position.

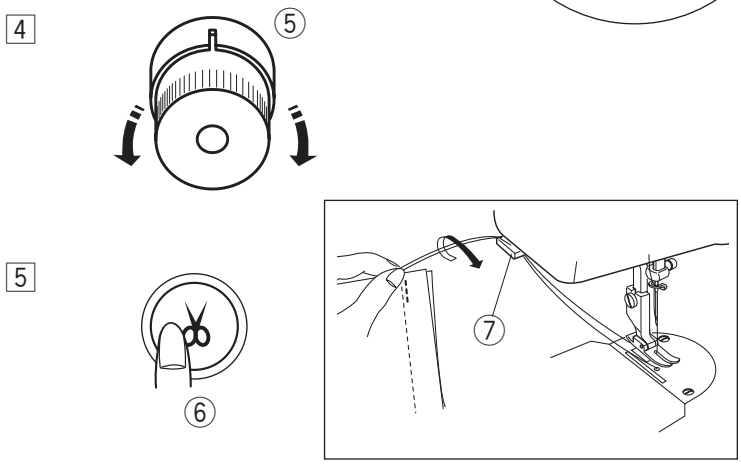

4 Check the sewing result and adjust the needle thread tension ⑤ as necessary.

5 Press the auto thread cutter button ⑥ to trim the threads.
You can continue sewing without pulling the bobbin thread up to the needle plate after trimming the threads.

* Use the thread cutter ⑦ on the face cover if the thread is thicker than #30.

Securing a Seam

• By reverse stitching

The machine will sew in reverse as long as the reverse stitch lever is pressed.
Secure the beginning and end of a seam by sewing in reverse for about 1 cm (3/8″).

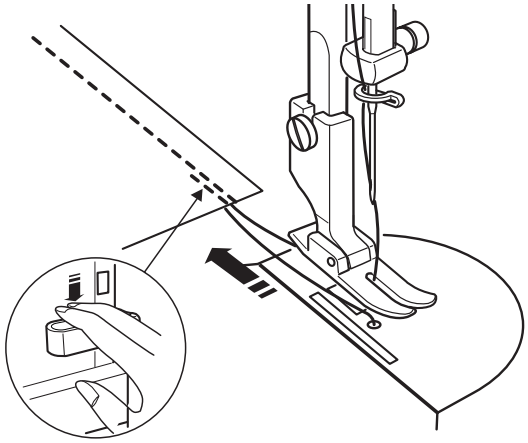

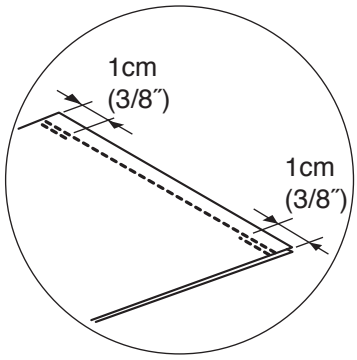

• By knotting the threads

Pull the bobbin thread to bring the needle thread to the wrong side of fabric.
Tie the threads together. Trim the remaining threads.

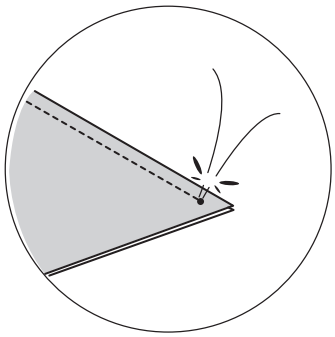

Turning a Square Corner

Stop the machine a few stitches before the end of the seam.
Press the up/down needle button a few times until the needle falls on the end of the seam.

Raise the presser foot.

Pivot the fabric around the needle to change the sewing direction.
Lower the presser foot and start sewing in a new direction.

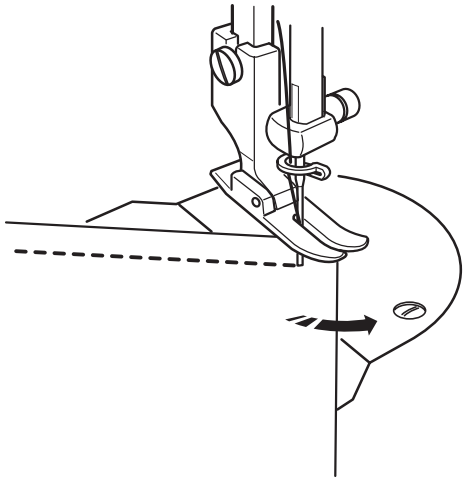

Using the Cloth Guide

Attach the cloth guide to the needle plate with the screw ①.
Adjust the position of the cloth guide ② and tighten the screw ①.

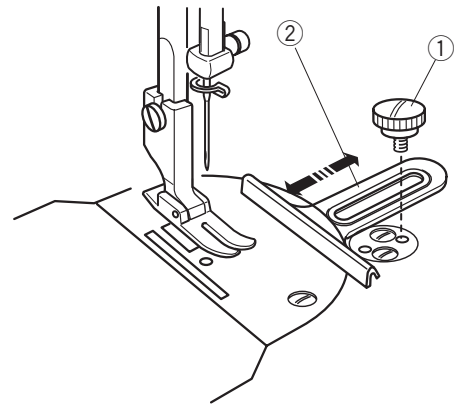

Place the fabric with its edge ③ against the cloth guide and sew.

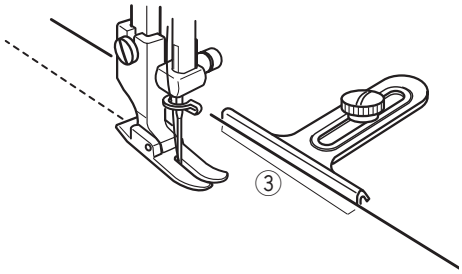

Rolled Hem

Attach the hemmer foot ② to the presser foot bar.
Tighten the setscrew ① using the large screwdriver.
① Setscrew
② Hemmer foot

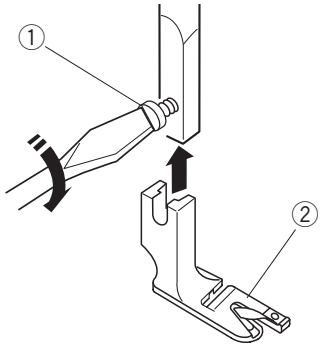

Fold the edge of the fabric twice, 6 cm (2 3/8″) in length and 0.3 cm (1/8″) in width.
Trim the corner 0.5 cm (3/16″) ④ by 0.8 cm (1/4″) ⑤ for easier insertion of the hem into the foot.

③ Wrong side of the fabric
④ 0.5 cm (3/16″)
⑤ 0.8 cm (1/4″)
⑥ Curl of the foot

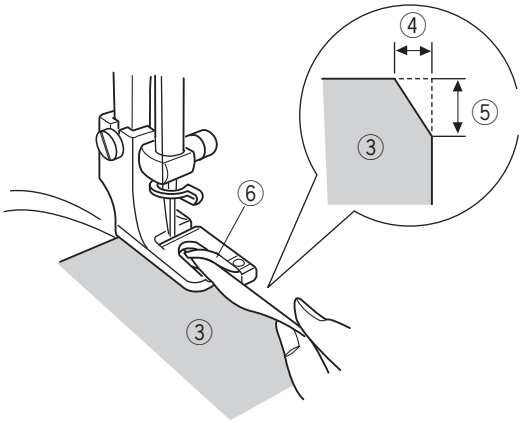

Position the fabric aligning the edge of hem with the curl of the foot ⑥.
Lower the foot and sew 1–2 cm (1/2″–1″) while pulling both threads to the back.
Stop the machine and lower the needle into the fabric. Raise the foot and insert the folded portion of the fabric into the curl of the foot.

Lower the foot, and then sew while lifting up the edge of the fabric to keep it feeding smoothly and evenly.

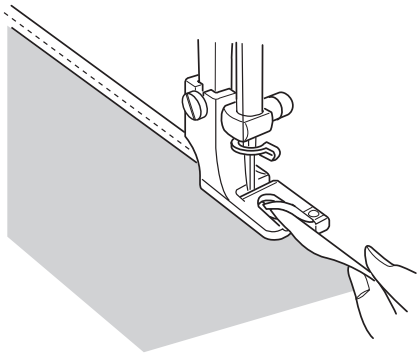

CARE & MAINTENANCE

Cleaning the Hook and Feed Dog

CAUTION:
Turn the power switch off and unplug the machine before cleaning.

1. Remove the needle and presser foot.
2. Remove the hook cover plate ① and open the hook cover ②.
3. Loosen the setscrew ③ and remove the needle plate ④.
4. Clean the hook ⑤ and feed dog ⑥ with a lint brush ⑦.
5. After cleaning the machine, attach the needle plate ④, needle and presser foot.

① Hook cover plate
② Hook cover
③ Setscrew
④ Needle plate
⑤ Hook
⑥ Feed dog
⑦ Lint brush

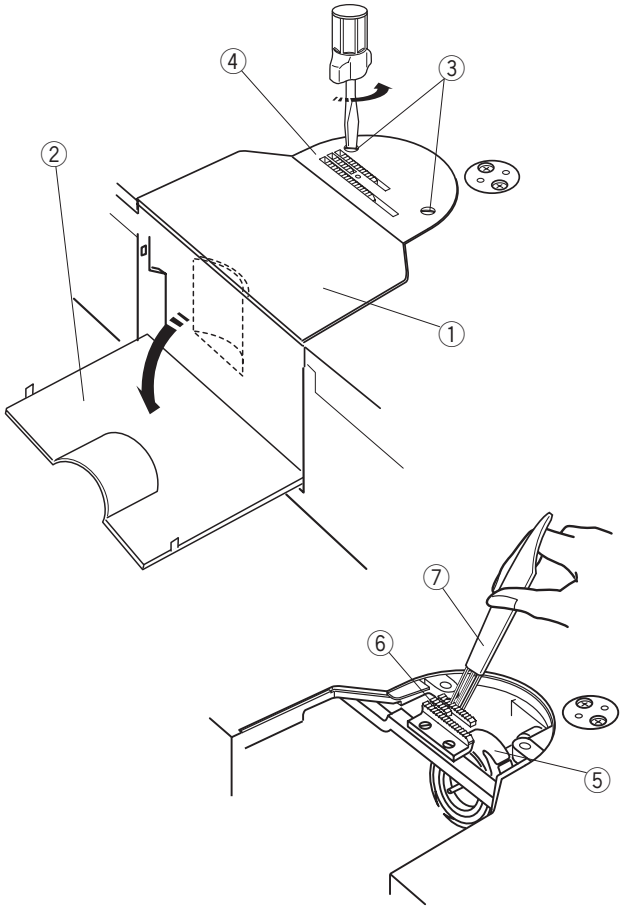

Oiling the Machine

NOTE:
Unplug the machine before oiling.

Oil the points as shown (①, ② and ③) with two or three drops of oil. Use only sewing machine oil MO-70 for this sewing machine.
Oil the machine once a day if you use the machine frequently.

Use a soft, dry cloth to remove excess oil.
Remove the bobbin case from the hook when you oil the hook race.
After oiling, stitch a piece of waste fabric to absorb excess oil.

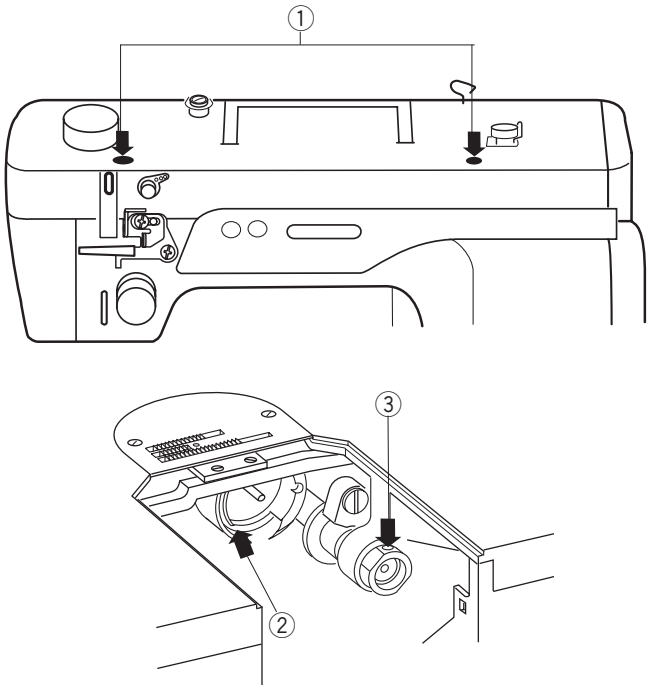

Troubleshooting

Condition	Cause	Reference
The needle thread breaks.	1. The needle thread is not threaded properly. 2. The needle thread tension is too tight. 3. The needle is bent or blunt. 4. The needle is incorrectly inserted. 5. The needle thread and the bobbin thread are not set under the presser foot when starting sewing. 6. The thread is either too heavy or too fine for the needle.	See pages 20, 24 See pages 20, 34 See page 32 See page 32 See page 30 See page 32
The bobbin thread breaks.	1. The bobbin thread is not threaded properly in the bobbin case. 2. Lint has collected in the hook race. 3. The bobbin is damaged and doesn't turn smoothly.	See page 18 See page 42 Replace the bobbin.
The needle breaks.	1. The needle is incorrectly inserted. 2. The needle clamp screw is loose. 3. The needle is too fine for the fabric being used.	See page 32 See page 32 See page 32
Skipped stitches	1. The needle is incorrectly inserted, bent or blunt. 2. The needle and/or fabrics are not suitable for the work being sewn. 3. The needle thread is not threaded properly. 4. A poor quality needle is being used.	See page 32 See page 32 See pages 20, 24 Change the needle
Seam puckering	1. The needle thread tension is too tight. 2. The needle thread is not threaded properly. 3. The needle is too heavy for the fabric being sewn. 4. The stitch length is too long for the fabric.	See pages 20, 34 See pages 20, 24 See page 32 Make the stitch shorter
The cloth is not feeding smoothly.	1. The feed dog is packed with lint. 2. The stitches are too fine.	See page 42 Make the stitch longer
Stitches form loops below the fabric.	1. The needle thread tension is too loose. 2. The needle is either too heavy or too fine for the thread.	See pages 20, 34 See page 32
The machine does not work.	1. The machine is not plugged in. 2. Thread has been caught in the hook race. 3. The presser foot is raised.	See page 8 See page 42 See page 12
The machine does not run smoothly and is noisy.	1. Thread has been caught in the hook race. 2. Lint has built up in the hook race or bobbin holder. 3. The machine needs oiling.	See page 42 See page 42 See page 42